IOTAFLOW
SYSTEMS PVT. LTD

GLASS TUBE
ROATMETERS

IOTAFLOW glass tube rotameters are unique design for industrial usage high precision tapered borosilicate glass tubes are utilized for best performances. Special design features eliminate stresses on glass tube even under industrial handling conditions. Glass tubes are field replacable without disturbing end connections.

IOTAFLOW glass tube rotameters are useful for measuring flow of Air, Comman Gases, Water, Alkelies, Oil & Organic Chemicals etc.

SPECIFICATIONS SERIES:

Meter Body	:	Powder coated M.S. optional SS 304, SS 316 etc.
Float	:	SS 316L, SS 316, PTFE, Monel, PVC etc.
Wetted Parts	:	SS 316L, SS 316, SS 304, MS PTFE, PVC, P.P., Monel etc.
Packings	:	Neoprene, PTFE , Silicon etc.
Tube	:	Borosillicate glass
Scale Length	:	175-225 mm
Temperature Max.	:	Upto 200°C depends on gland Packing material.
Connections	:	Flanged, threaded etc.
Accuracy	:	±2% of full scale.
Repeatibility	:	0.5%
Rangeability	:	10:1
Accessories	:	Hi- low flow switch, Steam jacketed

STANDARD RANGES:

NB	FLOW RATES. Water At 20°C LPH	FLOW RATES. Air At Amb. Temp. Nm^3/Hr	Pressure Rating KG/CM^2	Pressure Drop MM WG
15	10-100 25-250	0.3-3 0.8-8	20	250
20	50-500 60-600	1.5-15 1.8-18	20	360
25	100-1000 200-2000 300-3000	3-30 6-60 8-80	12	650
40	400-4000 500-5000 600-6000	12-120 15-150 18-180	9	650
50	80-8000 1000-10000 1200-12000	24-240 30-300	7	850
65	1500-15000	.....	5	950
80	2000-20000 3000-30000 8000-40000	....	5 5 5	950 1100 1100

OVERALL DIMENSIONS:

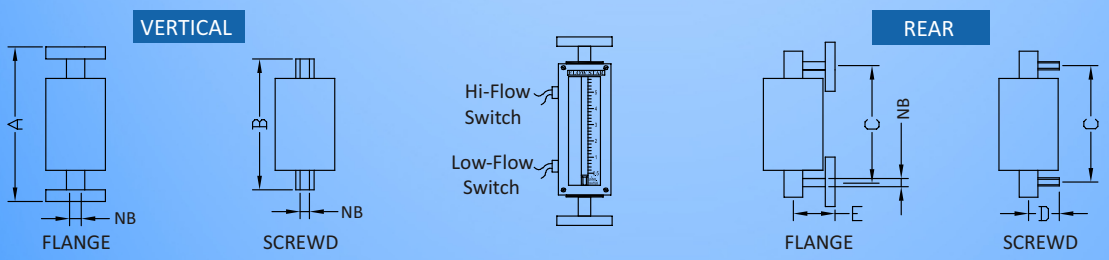

NB	A	B	C	D	E
15	500	425	440	55	90
20	500	425	440	60	90
25	500	425	440	65	115
40	500	425	500	85	140
50	500	450	500	85	155
65	500	N/A	500	N/A	190
80	500	N/A	500	N/A	190

SPECIFICATIONS SERIES :

Meter Body	:	Powder coated M.S. optional SS 304, SS 316
Float	:	SS 316L, SS 316, PTFE, Monel, PVC etc.
Wetted Parts	:	SS 316L, SS 316, SS 304 MS PTFE, PVC, P.P., Monel etc.
Packings	:	Neoprene, PTFE, Silicon etc.
Tube	:	Borosillicate glass
Scale Length	:	100-125 mm
Temperature Max.	:	Upto 200°C depends on gland packing material.
Connections	:	Flanged, threaded etc.
Accuracy	:	±2% of full scale.
Repeatibility	:	0.5%
Rangeability	:	10:1
Accessories	:	Hi- low flow switch

OVERALL DIMENSIONS:

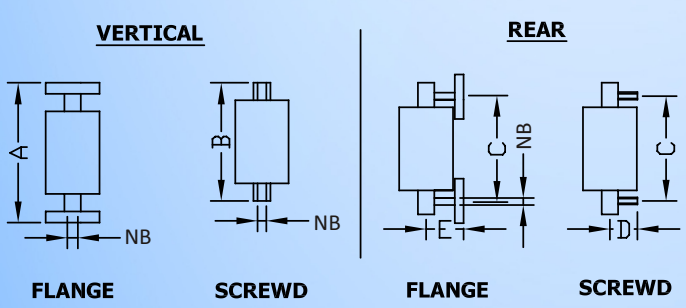

NB	A	B	C	D	E
15	350	300	325	55	90
20	350	300	325	60	90
25	350	300	325	65	115
40	350	300	325	85	140

STANDARD RANGES:

NB	FLOW RATES.		Pressure Rating	Pressure Drop
	Water At 20°C LPH	Air At AMB. Temp. Nm^3/Hr	KG/CM^2	MM WG
15	10-100 25-250	0.3-3 0.8-8	20	250
20	50-500 60-600	1.5-15 1.8-18	20	360
25	100-1000 200-2000 300-3000	3-30 6-60 8-80	12	650
40	400-4000 500-5000	12-120 15-150	9	650

IOTAFLOW PURGE GLASS TUBE ROATAMETERS:

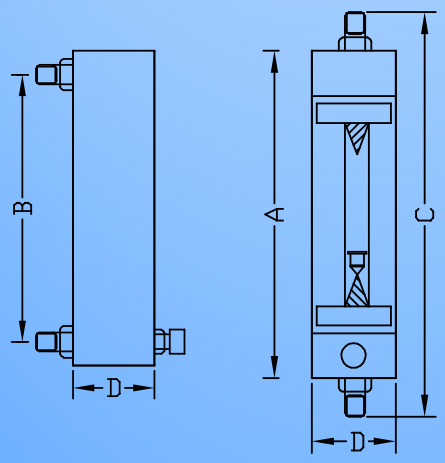

OVERALL DIMENSIONS:

Model	A	B	C	D
FSGT 1-3	144	114	190	28
FSGT 4-7	193	163	240	36
FSGT 8-17	255	225	302	36

SPECIFICATIONS:

Meter	:	Powder coated M.S., SS 304, SS 316
Float	:	SS 316L, SS 316, PTFE etc.
Wetted Parts	:	SS 316L, SS 316, SS 304, PTFE etc.
Packings	:	Neoprene, PTFE etc.
Tube	:	Borosillicate glass
Scale Length	:	Model FSGT 1-3 =65 mm,
	:	FSGT 4-7 = 1 10 mm & FSGT 8-17 =140 mm
Temp. Max.:		Upto 200°C depends on gland packing
Connections	:	threaded etc.
Accuracy	:	FSGT 1-3 ±5%, FSGT 4-7 ±3%,
		FSGT 8-17 ±2% of full scale.
Repeatibility	:	0.5%
Rangeability	:	10:1
Accessories	:	Hi- low flow switch

STANDARD RANGES SERIES:

FLOW RATES		
Water At 20°C LPH	Air At Amb. Temp. LPM	Air At Amb. Temp. SCFH
0.1-1	0.05-0.5	0.1-1
0.2-2	0.1-1	0.2-2
0.5-5	0.2-2	0.4-4
0.6-6	0.4-4	0.8-8
1.0-10	0.6-6	1.2-12
1.5-15	1.0-10	2.20
2.5-25	1.5-15	3-30
1.2-12	0.7-7	1.5-15
2-20	1.2-12	2.5-25
3-30	1.6-16	3.2-32
5-50	2.5-25	5-50
6-60	3-30	6-60
10-100	5-50	10-100
12-120	6-60	12-120
15-150	8-80	16-160
18-180	10-100	20-200
20-200	12-120	25-250

Contact Us

IOTAFLOW SYSTEMS PVT. LTD.

C-2/13, Mayapuri Industrial Area Phase-II,
New Delhi - 110064 (INDIA)

+91-9910693866/ +91-97790 85987

contact@iotaflow.com

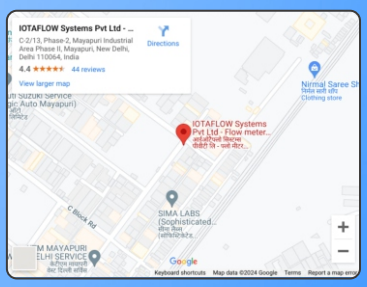

Specifications subject to change without prior notice. © Iotaflow Systems Pvt. Ltd.